36V high voltage high speed comparator

Features

- Fast Response Time: 360 ns
- Maximum Input Bias Current: 500 nA
- Can Operate from Single 5-V Supply to 36V

Applications

- Desktop PCs
- Body Control Modules
- White Goods
- Building Automation
- Oscillators
- Peak Detectors

Description

The LM211 is a single channel high-speed high-voltage comparator.

It can work under wide range of power supply voltages, including ±18 V supplies.

The output driving capability of the comparator is up to 50 mA and capable to drive lamps or relays.

The output has standalone drain and emitter output, so it can drive loads referenced to ground, V_{CC+} or V_{CC-}.

Typical Application Schematic

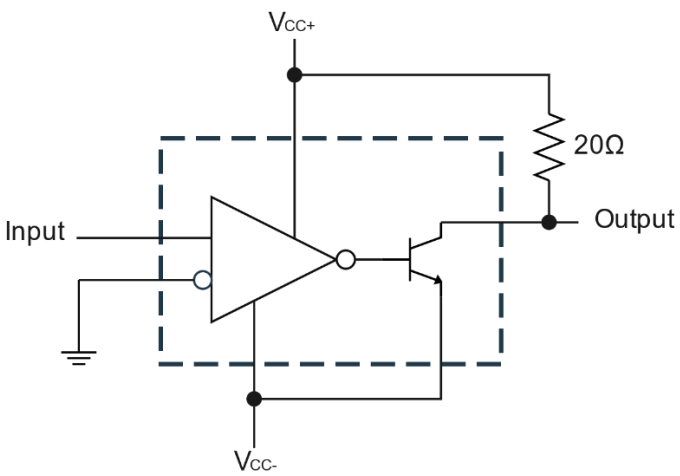

Table of Contents

Features **1**
Applications **1**
Description **1**
Typical Application Schematic **1**
Revision History **3**
Pin Configuration and Functions **4**
Pin Functions 4
Specifications **5**
Absolute Maximum Ratings 5
ESD, Electrostatic Discharge Protection 5
Thermal Information 5
Electrical Characteristics 6
Switching Characteristics 6
Typical Performance Characteristics 7
Tape and Reel Information **8**
Package Outline Dimensions **9**
SOP-8 9
Order Information **10**

Revision History

Date	Revision	Notes
2021-08-19	Rev.A.0	First version.

Pin Configuration and Functions

SOP-8 Package

Top View

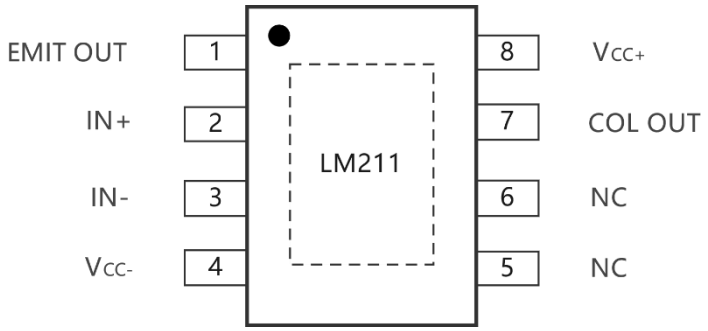

Pin Functions

Pin		I/O	Description
No.	Name		
1	EMIT OUT	O	Output emitter
2	IN+	I	Noninverting input
3	IN-	I	Inverting input
4	V_{CC-}	–	Negative supply
5	NC	NC	NC
6	NC	NC	NC
7	COL OUT	O	Output collector
8	V_{CC+}	–	Positive supply

Specifications

Absolute Maximum Ratings

Parameter		Min	Max	Unit
Supply Voltage	V_{CC+}(1)		20	V
	V_{CC-}(1)	−20		V
	$V_{CC+} – V_{CC-}$	−0.3	40	V
V_{ID}	Differential input voltage(2)		±40	V
V_I	Input voltage (either input)(1) (3)		±20	V
	Voltage from emitter output to V_{CC-}	−0.3	40	V
	Voltage from collector output to V_{CC-}	−0.3	40	V
T_J	Maximum Junction Temperature	−40	125	°C
T_{STG}	Storage Temperature Range	−65	150	°C

Note: Stresses beyond those listed under Absolute Maximum Ratings may cause permanent damage to the device. Exposure to any Absolute Maximum Rating condition for extended periods may affect device reliability and lifetime.
(1) Recommended Operating Conditions is not implied. Exposure to absolute-maximum-rated conditions for extended periods may affect device reliability.
(2) All voltage values, unless otherwise noted, are with respect to the midpoint between V_{CC+} and V_{CC-}. Differential voltages are at IN+ with respect to IN–.
(3) The magnitude of the input voltage must never exceed the magnitude of the supply voltage or ±20 V, whichever is less.

Recommended Operating Conditions

Parameter	Min	Typ	Max	Unit
$V_{CC+} – V_{CC-}$	3.5		36	V
VI	V_{CC-} + 0.6		V_{CC+} − 2	V
T_A	−40		125	V

ESD, Electrostatic Discharge Protection

Symbol	Parameter	Condition	Value	Unit
HBM	Human Body Model ESD	ANSI/ESDA/JEDEC JS-001(1)	±2000	V
CDM	Charged Device Model ESD	ANSI/ESDA/JEDEC JS-002(2)	±1000	V

(1) JEDEC document JEP155 states that 500-V HBM allows safe manufacturing with a standard ESD control process.
(2) JEDEC document JEP157 states that 250-V CDM allows safe manufacturing with a standard ESD control process.

Thermal Information

Package Type	θ_{JA}	θ_{JC}	Unit
8-Pin SOP	112.40	64.12	°C/W

Electrical Characteristics

At specified free-air temperature, $V_{CC\pm}$ = ±2.5 V – ±18 V (unless otherwise noted), all typical values are at T_A = 25°C.

Symbol	Parameter	Conditions(1)		Min	Typ	Max	Unit
V_{IO}	Input offset voltage	T_A = 25°C			0.16	3	mV
		See(2), T_A = −40 to 125°C				4	mV
I_{IO}	Input offset current	See(2)			5		nA
I_{IB}	Input bias current	T_A = 25°C			35		
		Vin in common-mode range, T_A = −40 to 125°C				500	nA
	Common-mode V_{ICR} input-voltage range(2)	Lower range, T_A = −40 to 125°C				V_{CC-} + 0.6	V
		Upper range, T_A = −40 to 125°C		V_{CC+} − 2			V
	Large-signal AVD differential-voltage amplification	V_{CC} = ±18 V, T_A = 25°C Pull up resistor = 7.5 kΩ		40	200		V/mV
I_{OH}	High-level output leakage current	V_{ID} = 5 mV V_{OH} = 30 V	T_A = 25°C		2		nA
			T_A = −40 to 125°C			0.5	μA
V_{OL}	Low-level (collector to emitter)	V_{CC} = ±15 V, I_{OL} = 50 mA, V_{ID} = –10 mV, T_A = 25°C			0.75	1.5	
	Output voltage	V_{CC} =±2.25 V, I_{OL} = 8 mA, V_{ID} = –6 mV, T_A = −40 to 125°C			0.23	0.4	
I_{CC}	Supply current from V_{CC+} output low	V_{ID} = –10 mV, No load, T_A = 25°C			6	8	mA

(1) Unless otherwise noted, all characteristics are measured with EMIT OUT grounded.
(2) The offset voltages and offset currents given are the maximum values required to drive the collector output up or down with a pullup resistor of 7.5 kΩ to V_{CC+}. These parameters actually define an error band and take into account the worst-case effects of voltage gain and input impedance.

Switching Characteristics

$V_{CC\pm}$ = ±18 V, T_A = 25°C

Parameter	Test Condition	Typ	Unit
Response time, low-to-high-level output, See(1)	R_C = 500 Ω to 5 V, C_L = 5 pF	360	ns
Response time, high-to-low-level output, See(1)		330	ns

(1) The response time specified is for a 200-mV input step with 100-mV overdrive and is the interval between the input step function and the instant when the output crosses 1.4 V.

Typical Performance Characteristics

All test condition: V_{IN} = 5V, T_A = +25°C, unless otherwise noted.

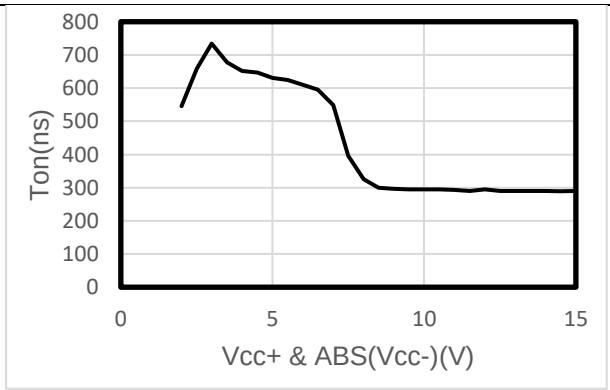

Figure 1 Rising edge delay

V(COL_OUT) to GND, V_{CM} = 0 V,
V_{IN-} = 0 V, (V_{IN+} – V_{IN-}) from –100 mv to 5 mV

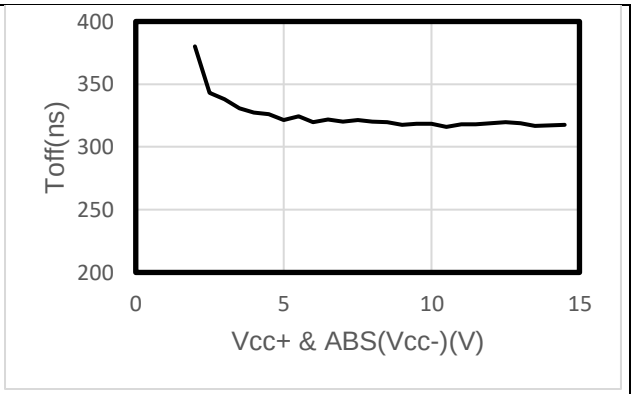

Figure 2 Falling edge delay

V(COL_OUT) to GND, V_{CM} = 0 V,
(V_{IN+} – V_{IN-}) from 100mv to –5 mV

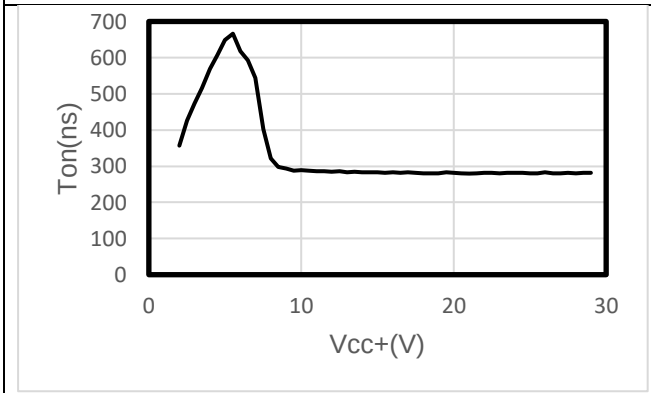

Figure 3 Rising edge delay

V(COL_OUT) to GND, V_{CC-} = –0.5 V, V_{CM} = 0.5 V,
(V_{IN+} – V_{IN-}) from –100mv to 5 mV

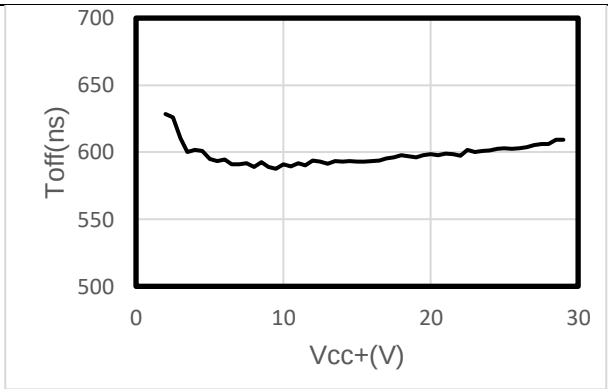

Figure 4 Falling edge delay

V(COL_OUT) to GND, V_{CC-} = –0.5V, V_{CM} = 0.5 V,
(V_{IN+} – V_{IN-}) from 100mv to –5 mV

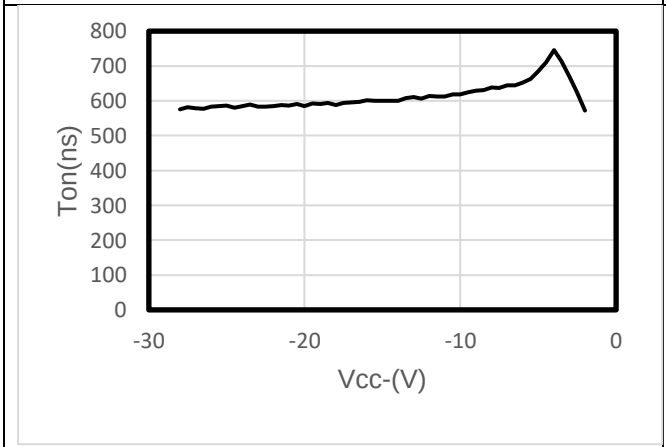

Figure 5 Rising edge delay

V(COL_OUT) to GND, V_{CC+} = 2 V, V_{CM} = V_{CC+} – 2V,
(V_{IN+} – V_{IN-}) from –100 mv to 5 mV

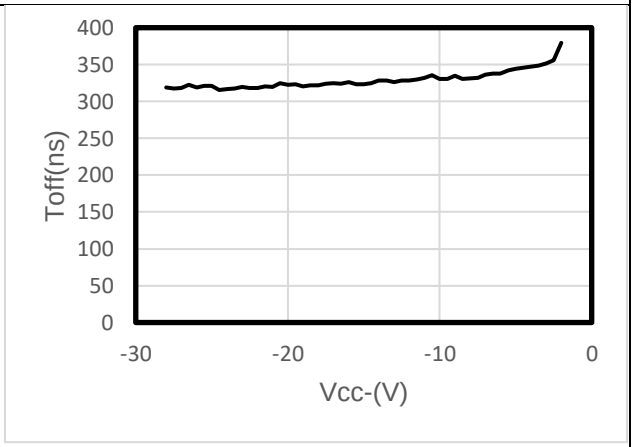

Figure 6 Falling edge delay

V(COL_OUT) to GND, V_{CC+} = 2 V, V_{CM} = V_{CC+} – 2 V,
(V_{IN+} – V_{IN-}) from 100 mV to -5 mV

Tape and Reel Information

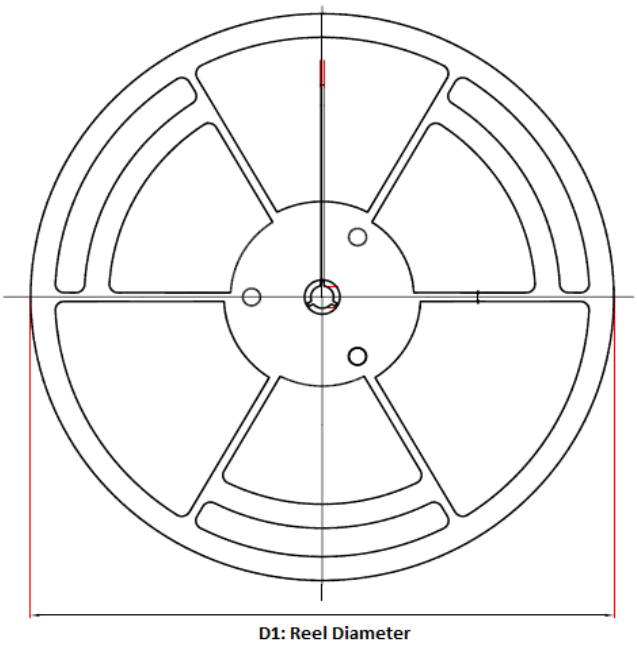

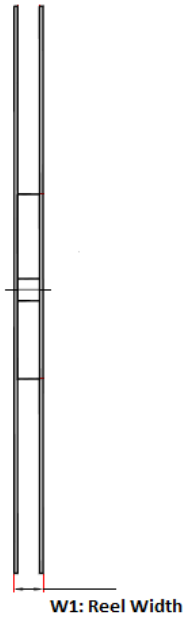

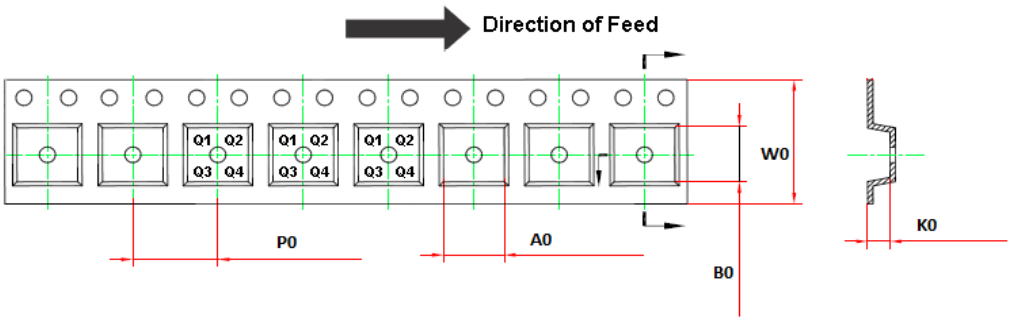

Order Number	Package	D1 (mm)	W1 (mm)	A0 (mm)	B0 (mm)	K0 (mm)	P0 (mm)	W0 (mm)	Pin1 Quadrant
LM211-SO1R-S	SOP-8	330.0	17.6	6.4	5.4	2.1	8.0	12.0	Q1

Package Outline Dimensions

SOP-8

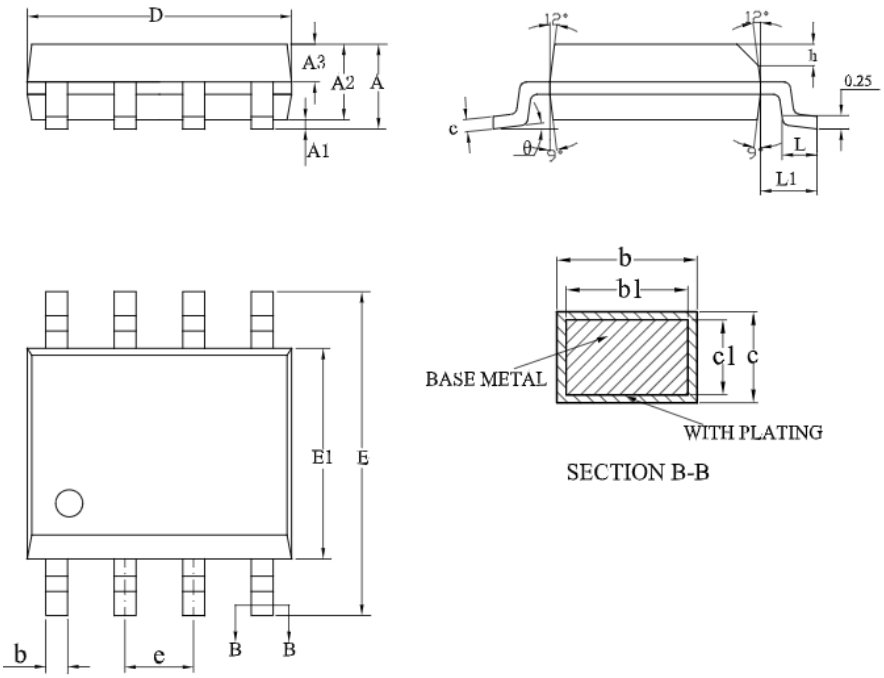

SYMBOL	MILLIMETER		
	MIN	NOM	MAX
A	—	—	1.75
A1	0.10	—	0.225
A2	1.30	1.40	1.50
A3	0.60	0.65	0.70
b	0.39	—	0.47
b1	0.38	0.41	0.44
c	0.20	—	0.24
c1	0.19	0.20	0.21
D	4.80	4.90	5.00
E	5.80	6.00	6.20
E1	3.80	3.90	4.00
e	1.27BSC		
h	0.25	—	0.50
L	0.50	—	0.80
L1	1.05REF		
θ	0	—	8°

Order Information

Order Number	Operating Temperature Range	Package	Marking Information	MSL	Transport Media, Quantity	Eco Plan
LM211-SO1R-S	–40 to 125°C	SOP-8	LM211	MSL3	Tape and Reel, 4,000	Green

Green: 3PEAK defines "Green" to mean RoHS compatible and free of halogen substances.

3PEAK and the 3PEAK logo are registered trademarks of 3PEAK INCORPORATED. All other trademarks are the property of their respective owners.